24/7 SHOP AT HÖME

ASSEMBLY INSTRUCTIONS

MODEL #

263490CT
263530CT

Questions?

GIVE US A CALL: 1-888-980-5122
MON-FRI 8:30AM - 5:30PM (PT)



Screwdriver
(Not included)

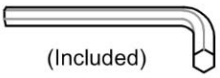

Allen Wrench

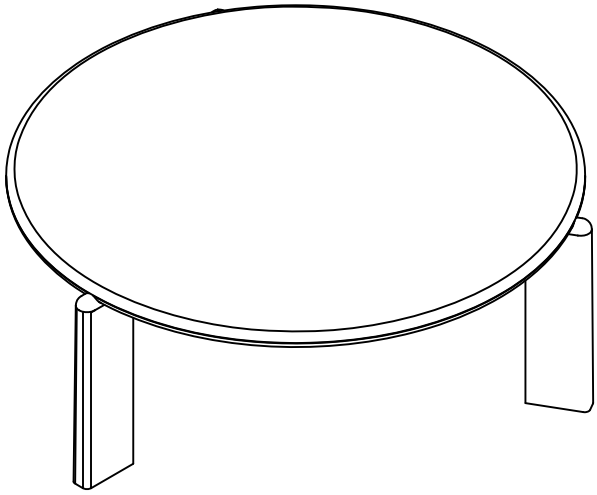



2 - People

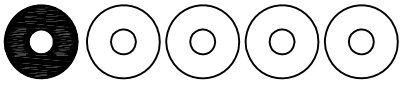

EASY- - - - - - ►DIFFICULT

The Assembly Rating is a 5-point system showing the level of effort needed to assemble a specific product.

24/7 SHOP AT HOME

Thank you for choosing our product!

We hope you enjoy this new addition to your home for many years to come.

We aim to provide both practical products and quality service. If you have any assembly questions or need to replace some parts, just let us know! Our customer care team is available Monday – Friday 8:30 AM – 5:30 PM Pacific and can assist you via email or phone. To help expedite our service, please have this assembly guide readily available, along with your order receipt.

Consumer Hotline
(626) 363-9307

Monday to Friday
8:30AM- 5:30PM (PST)

WEBSITE
www.247shopathome.com

E-MAIL
customerservice@247shopathome.com

247shopathome

Official Site

Amazon Store

TikTok Shop

CHECK BEFORE STARTING

- [ ] **Are you missing anything?**
  Double-check all parts, hardware and accessories listed are all accounted for.

- [ ] **Should we send any replacements?**
  Are there any irregularities or flaws in the parts? We can send replacements!

- [ ] **Check out our Quick Tips!**
  We recommend reviewing the pre-assembly handouts. Even experts need a refresher now and then!

- [ ] **Prep Time!**
  Please review the assembly instructions and all diagrams prior to assembling. Arrange parts as recommended on Page 7 and group identical hardware together to make assembling easier.

PRE ASSEMBLY INTRODUCTION

We understand building ready-to-assemble furniture can be a challenging experience for some. To help avoid confusion, we have provided some helpful tips that may speed up the process.



Teamwork

ALWAYS have at least two people to help with transporting and assembling the product to avoid potential injury and/or damage.



Suitable Location

Assembling near the area of the intended location is highly recommended.



Sufficient Space

Make sure you have enough space to move around during the assembly.



Avoid Scratches

Use cardboard, blankets or a carpeted area while assembling furniture to prevent to prevent scratches and damages.



Flat Surface

Make sure the furniture rests on a flat and level surface with each leg evenly touching the floor.

ASSEMBLY AND CARE ADVICE

FAILURE TO FOLLOW THE GUIDELINES BELOW MAY RESULT IN INJURY AND/OR PROPERTY DAMAGE.



Position each part correctly and insert screws or bolts into their respective holes.

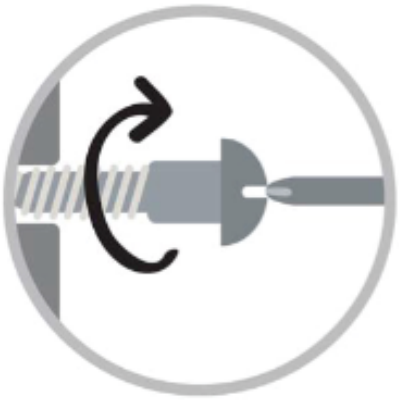

Turn clockwise to tighten and only tighten when step is completed or when instructed to do so.



Use the appropriate hand tools or power tools for assembly. Select steps, such as tightening screws and/or bolts, may require hand tools to avoid causing damage during assembly.



Save the instructions and store any supplied tools for later maintenance.



After two weeks, check and tighten any loose hardware and repeat again every six months thereafter.

IT IS THE USER'S RESPONSIBILITY TO MAINTAIN THE FURNITURE. THE HARDWARE MAY LOOSEN OVER TIME AND MAY CAUSE THE FURNITURE TO BE WOBBLY AND UNABLE TO SUPPORT ITS INTENDED WEIGHT CAPACITY. THIS MAY LEAD TO COLLAPSE AND MAY CAUSE SERIOUS INJURY.

CAMLOCK FASTENER ASSEMBLY INSTRUCTIONS

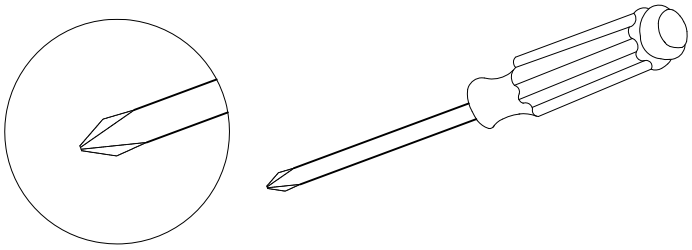

Note:Every cam lock bolt must have a cam lock connector in order to fasten the parts together.

(1) **Secure the threded end of the cam bolt by using a screwdriver.**

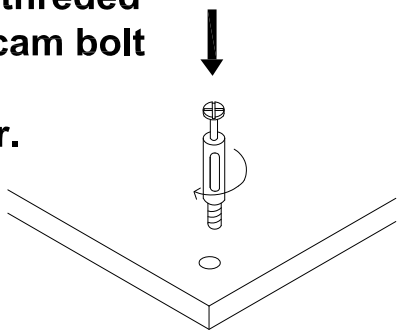

Tun right (clokwise) to tighten.

Align the cam connector with its side opening (or arrow) pointing to the small drilled hole.

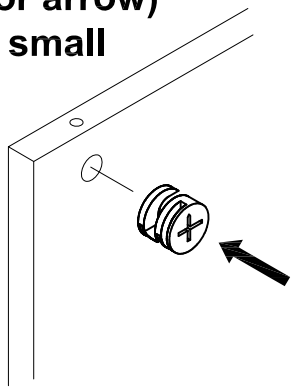

(2)

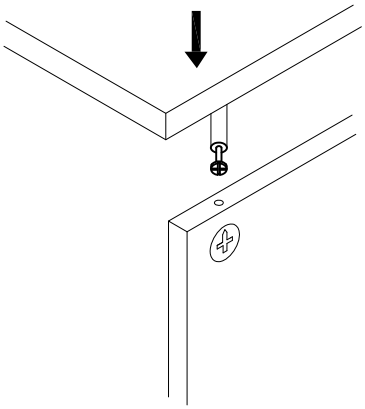

Insert the cam lock bolt into the pre-drllled hole above the cam connector.



(3) **Two parts should fit snugly against each other.**

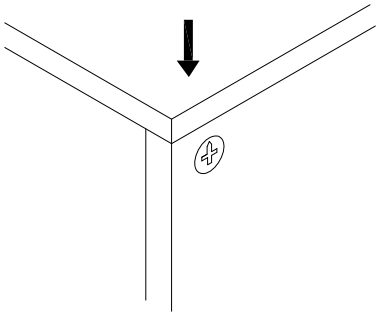

(4)

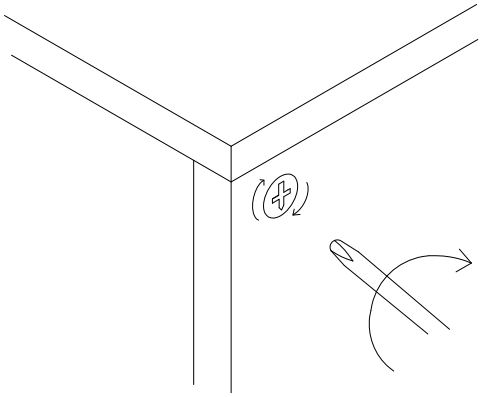

Turn right(clockwise) to tighten.

Turn the cam connector with a screwdriver until it will not turn any more with light to moderate force.



COFFE TABLE

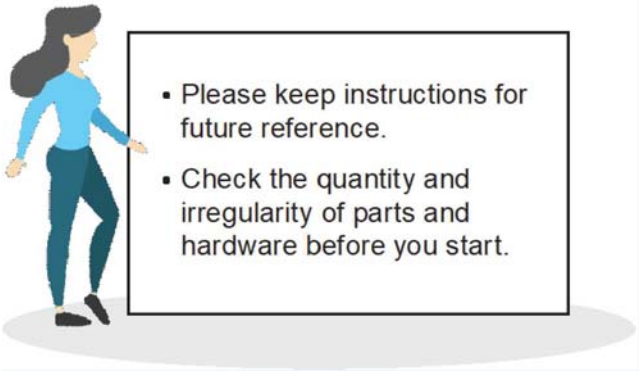

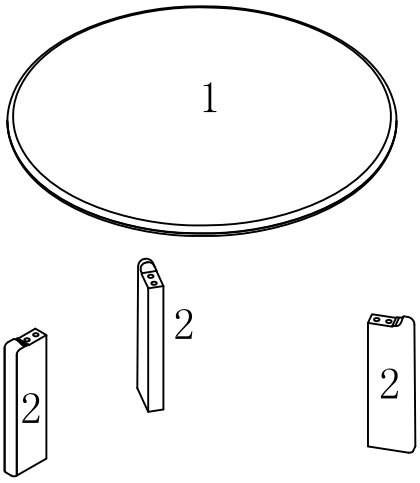

PARTS

❶ 1PCS

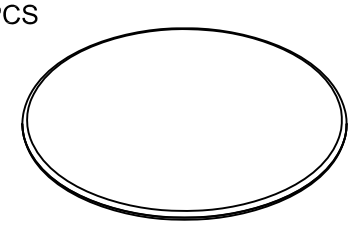

TOP PANEL

❷ 3PCS

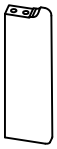

LEG

HARDWARE

Ⓐ 

IRON SHEET
80X60 3PCS

Ⓑ 

SCREW
Ø8X20 6PCS

Ⓒ 

SCREW
Ø6X12 12PCS

Ⓓ 

SHACKLES
Ø16 6PCS

ASSEMBLY INSTRUCTIONS

1

HARDWARE Ⓐ X 3PCS
HARDWARE Ⓑ X 6PCS

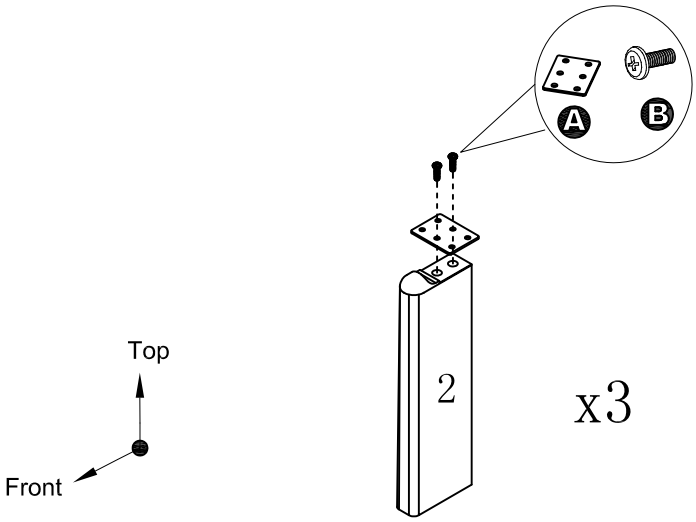

2

HARDWARE Ⓒ X 12PCS

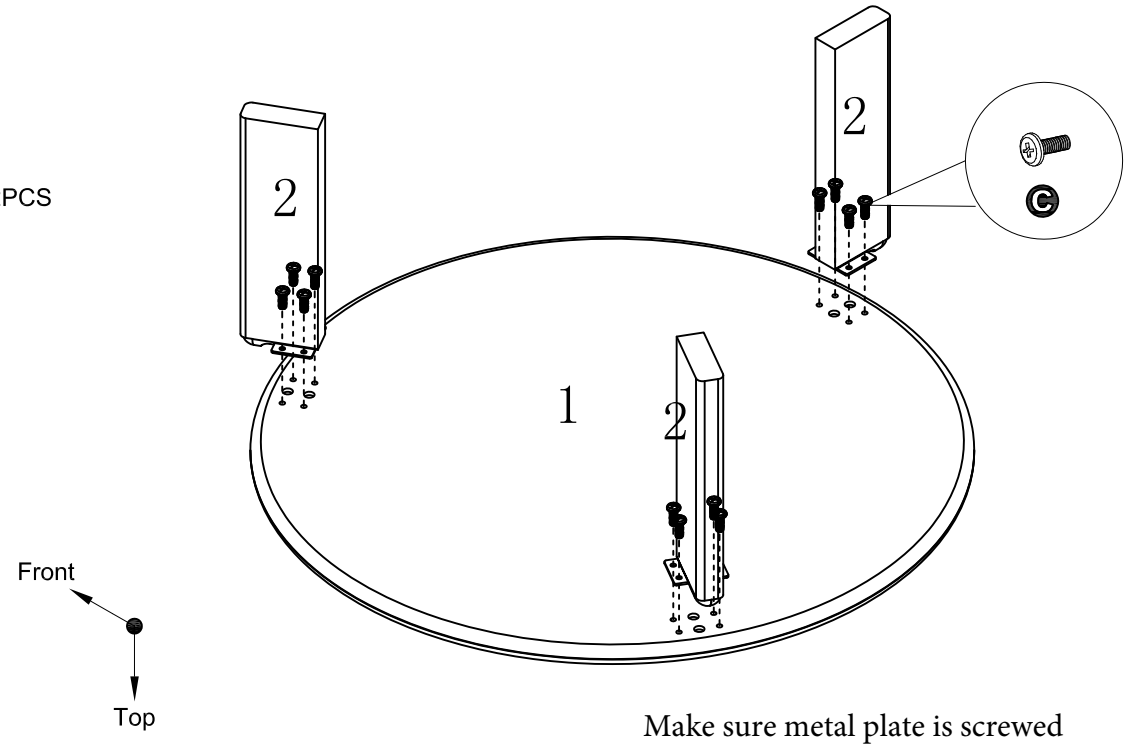

Make sure metal plate is screwed flush against table to minimize leg misalignment.

ASSEMBLY INSTRUCTIONS

3

HARDWARE (D) X 6PCS

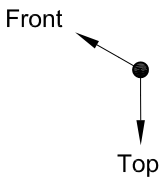

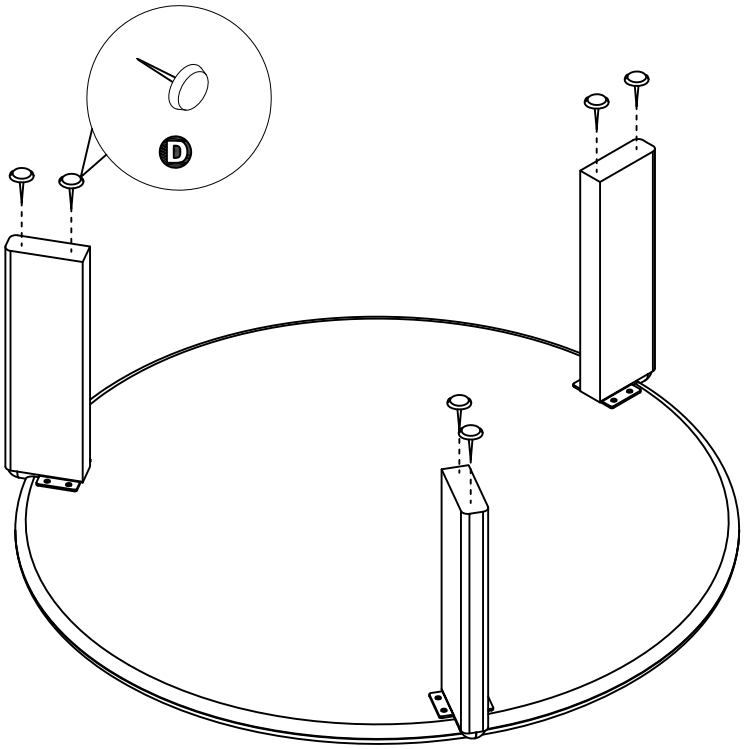

4

