24/7 SHOP AT HÖME

ASSEMBLY INSTRUCTIONS

MODEL #

263467
263468
263469

Questions?

GIVE US A CALL: 1-888-980-5122
MON-FRI 8:30AM - 5:30PM (PT)

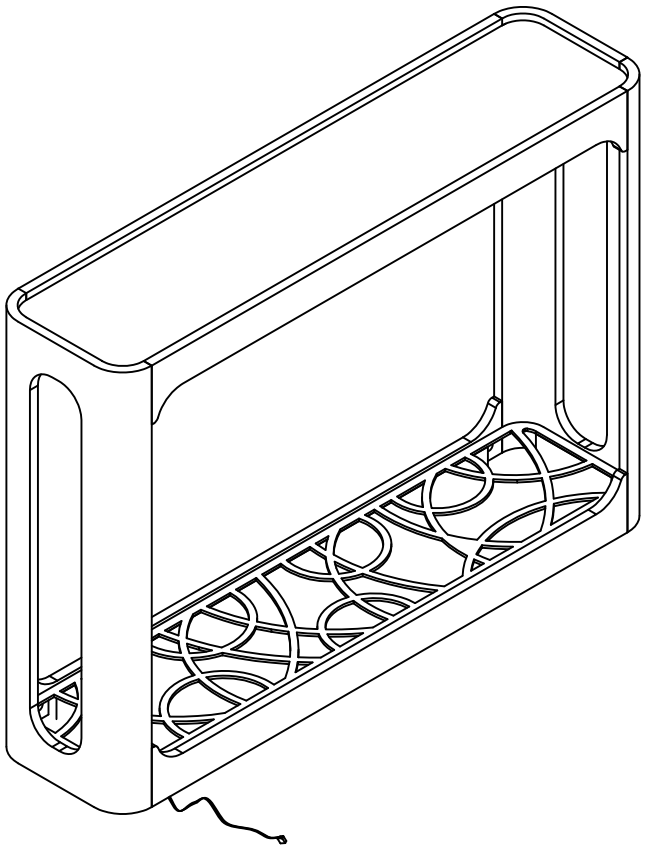



Screwdriver
(Not included)

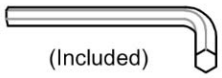

Allen Wrench



2 - People

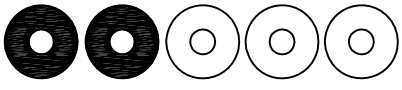

The Assembly Rating is a 5-point system showing the level of effort needed to assemble a specific product.

24/7 SHOP AT HOME

Thank you for choosing our product!

We hope you enjoy this new addition to your home for many years to come.

We aim to provide both practical products and quality service. If you have any assembly questions or need to replace some parts, just let us know! Our customer care team is available Monday – Friday 8:30 AM – 5:30 PM Pacific and can assist you via email or phone. To help expedite our service, please have this assembly guide readily available, along with your order receipt.

Consumer Hotline
(626) 363-9307

Monday to Friday
8:30AM- 5:30PM (PST)

WEBSITE
www.247shopathome.com

E-MAIL
customerservice@247shopathome.com

247shopathome

Official Site

Amazon Store

TikTok Shop

CHECK BEFORE STARTING

- [ ] **Are you missing anything?**
  Double-check all parts, hardware and accessories listed are all accounted for.

- [ ] **Check out our Quick Tips!**
  We recommend reviewing the pre-assembly handouts. Even experts need a refresher now and then!

- [ ] **Should we send any replacements?**
  Are there any irregularities or flaws in the parts? We can send replacements!

- [ ] **Prep Time!**
  Please review the assembly instructions and all diagrams prior to assembling. Arrange parts as recommended on Page 7 and group identical hardware together to make assembling easier.

PRE ASSEMBLY INTRODUCTION

We understand building ready-to-assemble furniture can be a challenging experience for some. To help avoid confusion, we have provided some helpful tips that may speed up the process.



Teamwork

ALWAYS have at least two people to help with transporting and assembling the product to avoid potential injury and/or damage.



Suitable Location

Assembling near the area of the intended location is highly recommended.



Sufficient Space

Make sure you have enough space to move around during the assembly.



Avoid Scratches

Use cardboard, blankets or a carpeted area while assembling furniture to prevent to prevent scratches and damages.



Flat Surface

Make sure the furniture rests on a flat and level surface with each leg evenly touching the floor.

ASSEMBLY AND CARE ADVICE

FAILURE TO FOLLOW THE GUIDELINES BELOW MAY RESULT IN INJURY AND/OR PROPERTY DAMAGE.



Position each part correctly and insert screws or bolts into their respective holes.

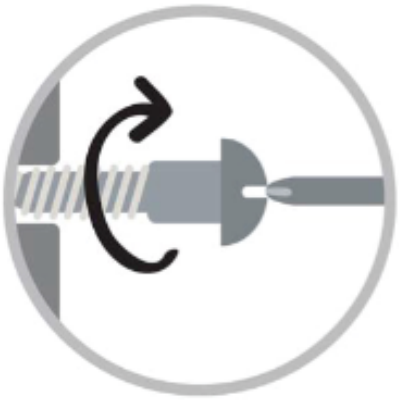

Turn clockwise to tighten and only tighten when step is completed or when instructed to do so.



Use the appropriate hand tools or power tools for assembly. Select steps, such as tightening screws and/or bolts, may require hand tools to avoid causing damage during assembly.



Save the instructions and store any supplied tools for later maintenance.



After two weeks, check and tighten any loose hardware and repeat again every six months thereafter.

IT IS THE USER'S RESPONSIBILITY TO MAINTAIN THE FURNITURE. THE HARDWARE MAY LOOSEN OVER TIME AND MAY CAUSE THE FURNITURE TO BE WOBBLY AND UNABLE TO SUPPORT ITS INTENDED WEIGHT CAPACITY. THIS MAY LEAD TO COLLAPSE AND MAY CAUSE SERIOUS INJURY.

CAMLOCK FASTENER ASSEMBLY INSTRUCTIONS

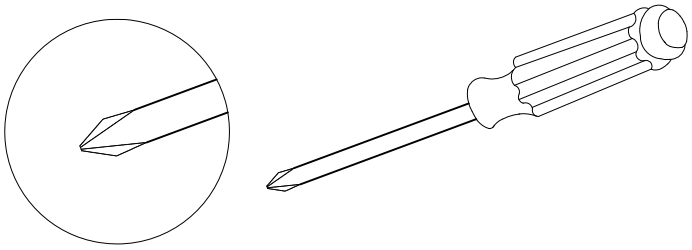

Note:Every cam lock bolt must have a cam lock connector in order to fasten the parts together.

(1) **Secure the threded end of the cam bolt by using a screwdriver.**

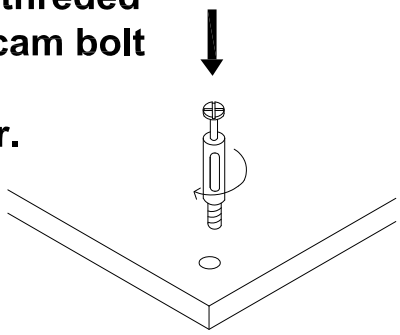

Tun right (clokwise) to tighten.

Align the cam connector with its side opening (or arrow) pointing to the small drilled hole.

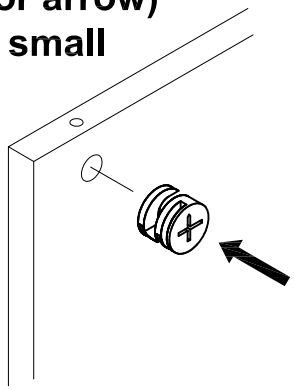

(2)

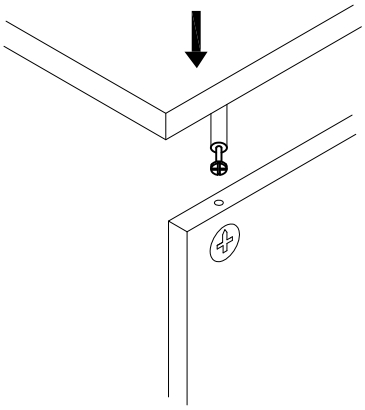

Insert the cam lock bolt into the pre-drllled hole above the cam connector.



(3) **Two parts should fit snugly against each other.**

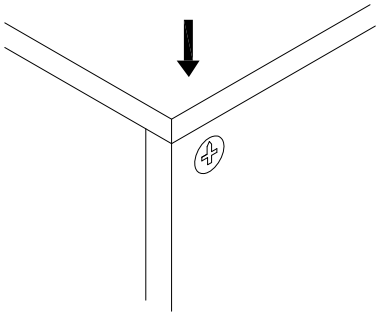

(4)

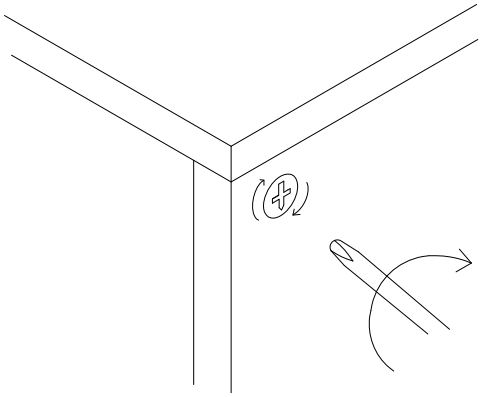

Turn right(clockwise) to tighten.

Turn the cam connector with a screwdriver until it will not turn any more with light to moderate force.



CONSOLE

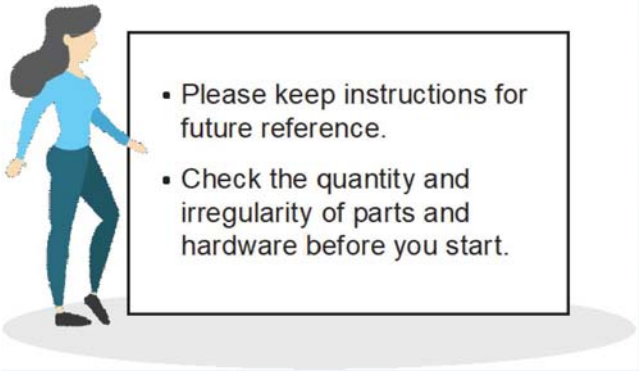

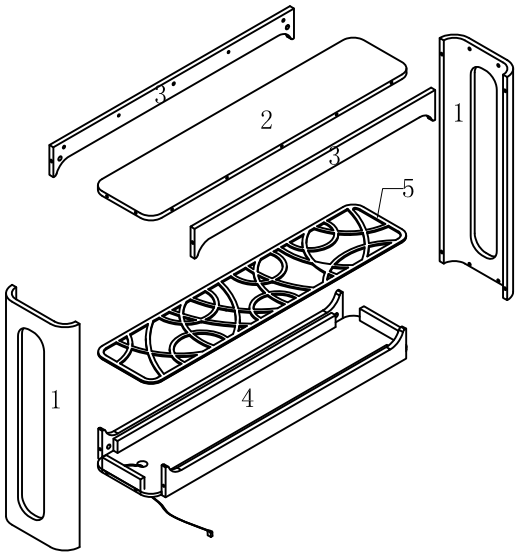

PARTS

❶ 2PCS

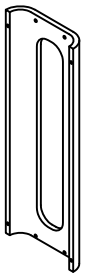

SIDE PANEL

❷ 1PC

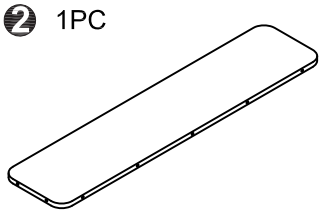

TOP PANEL

❸ 2PCS

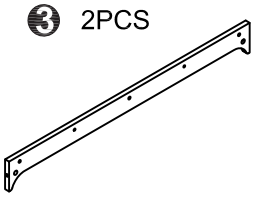

TOP MOLDING

❹ 1PC

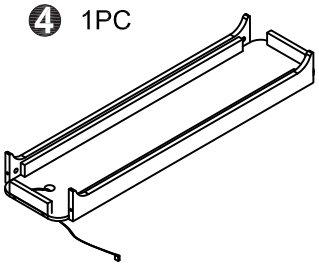

BOTTOM PANEL

❺ 1PC

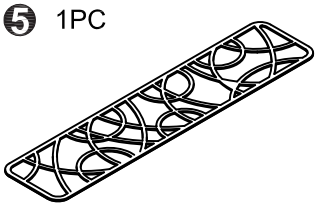

TRIM

HARDWARE

Ⓐ 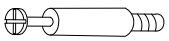

CAMBOLT
L29 22PCS

Ⓑ 

CAMLOCK L
Ø15 22PCS

Ⓒ 

DOWEL
Ø8X25 4PCS

Ⓓ 

SHACKLES
Ø16 6PCS

Ⓔ

STARP
250X5X1 1PC

Ⓕ 

FLATHEAD SCREW
Ø4X25 1PC

Ⓖ 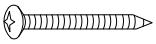

DRYWALL SCREW
Ø5X40 1PC

Ⓗ 

DRYWALL ANCHOR
Ø8X40 1PC

Ⓘ 

METAL BRACKETS
12X12X1 2PCS

ASSEMBLY INSTRUCTIONS

1

HARDWARE Ⓐ X 6PCS

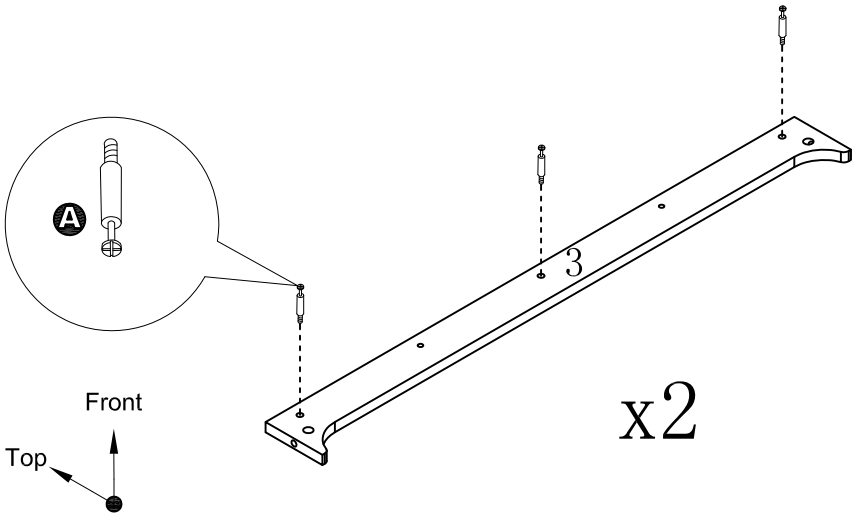

2

HARDWARE Ⓑ X 3PCS
HARDWARE Ⓒ X 2PCS

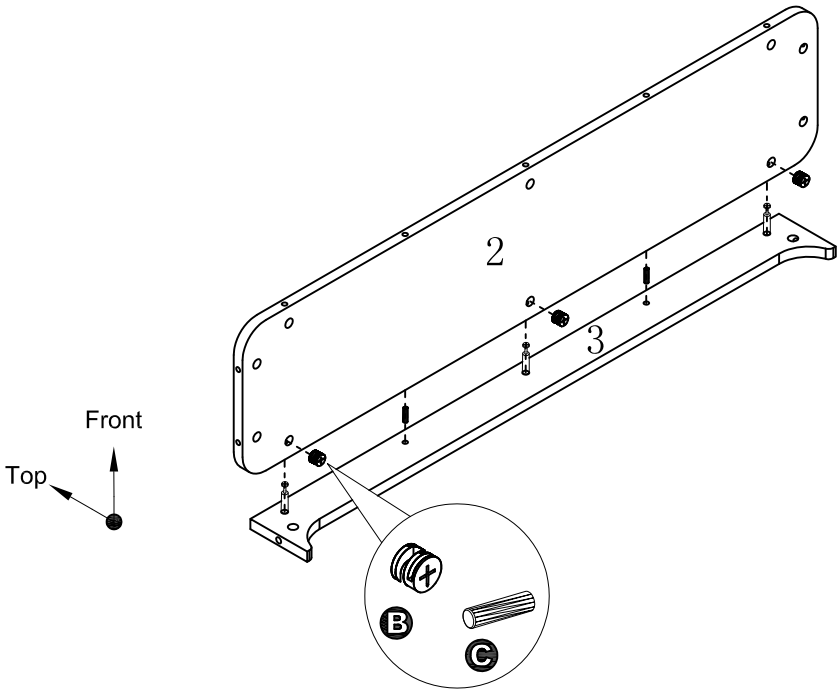

ASSEMBLY INSTRUCTIONS

3

HARDWARE Ⓑ X 3PCS
HARDWARE Ⓒ X 2PCS

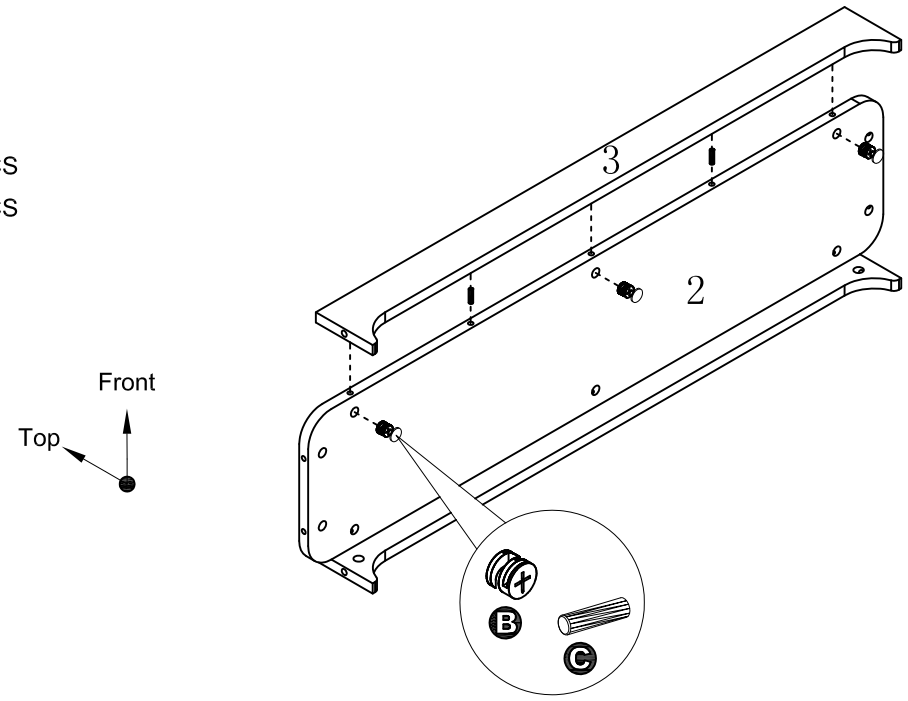

4

HARDWARE Ⓐ X 16PCS

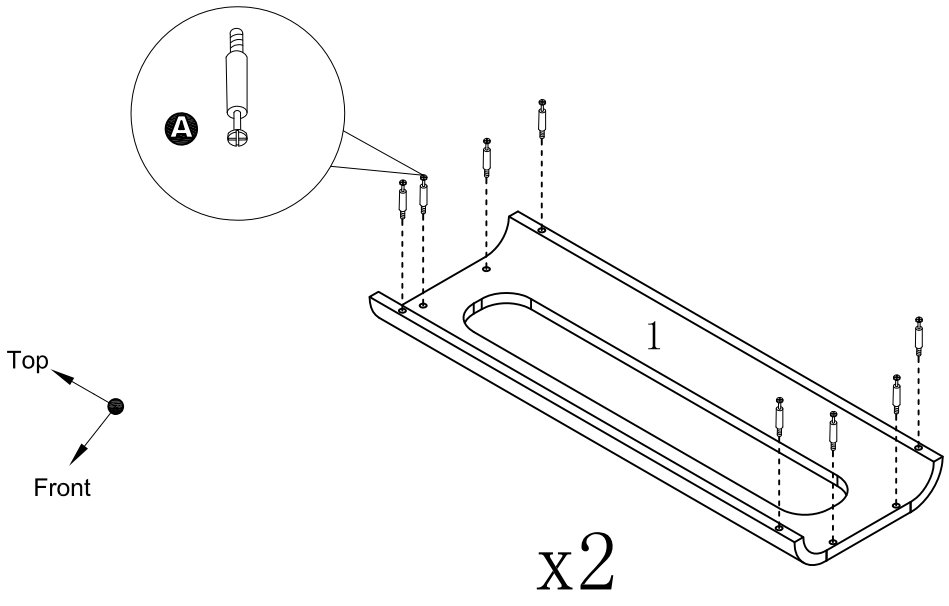

ASSEMBLY INSTRUCTIONS

5

HARDWARE Ⓑ X 4PCS

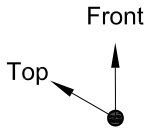

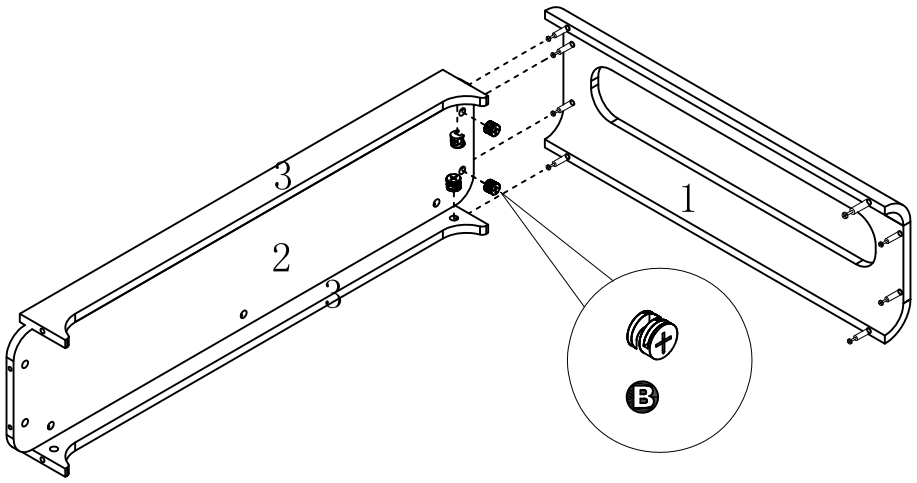

6

HARDWARE Ⓑ X 4PCS

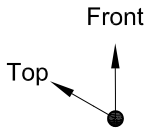

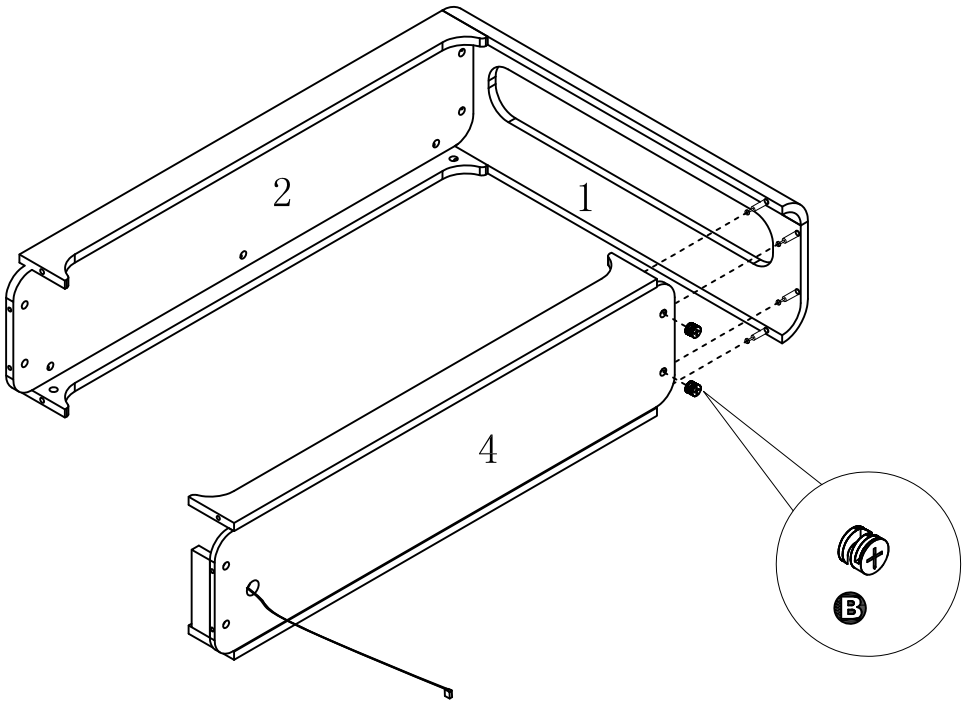

ASSEMBLY INSTRUCTIONS

7

HARDWARE Ⓑ X 8PCS

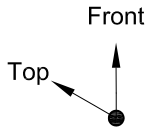

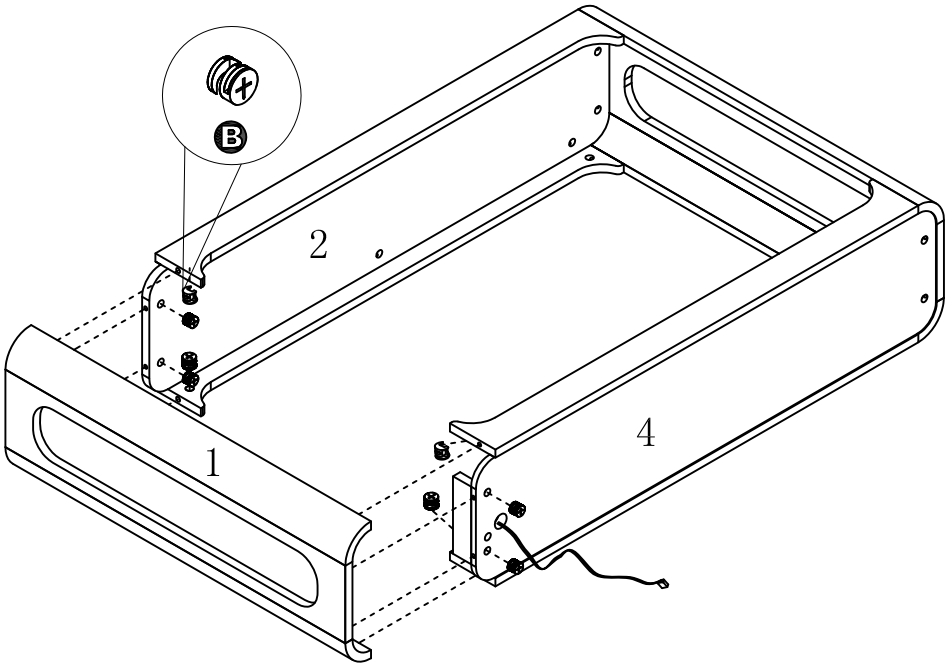

8

HARDWARE Ⓓ X 6PCS

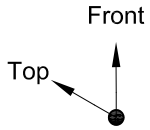

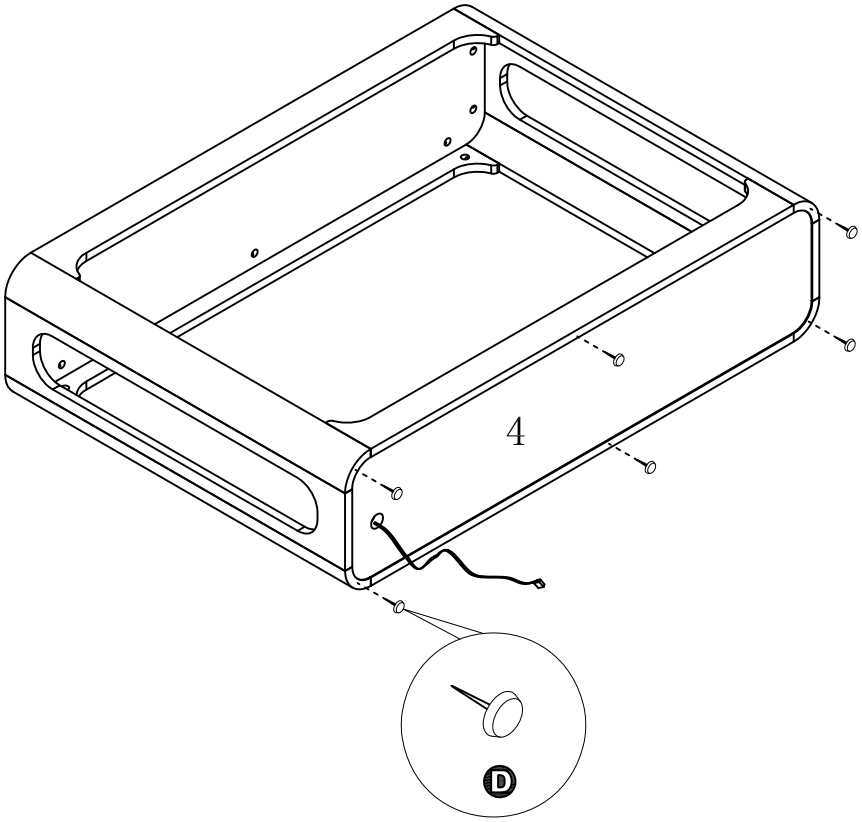

ASSEMBLY INSTRUCTIONS

9

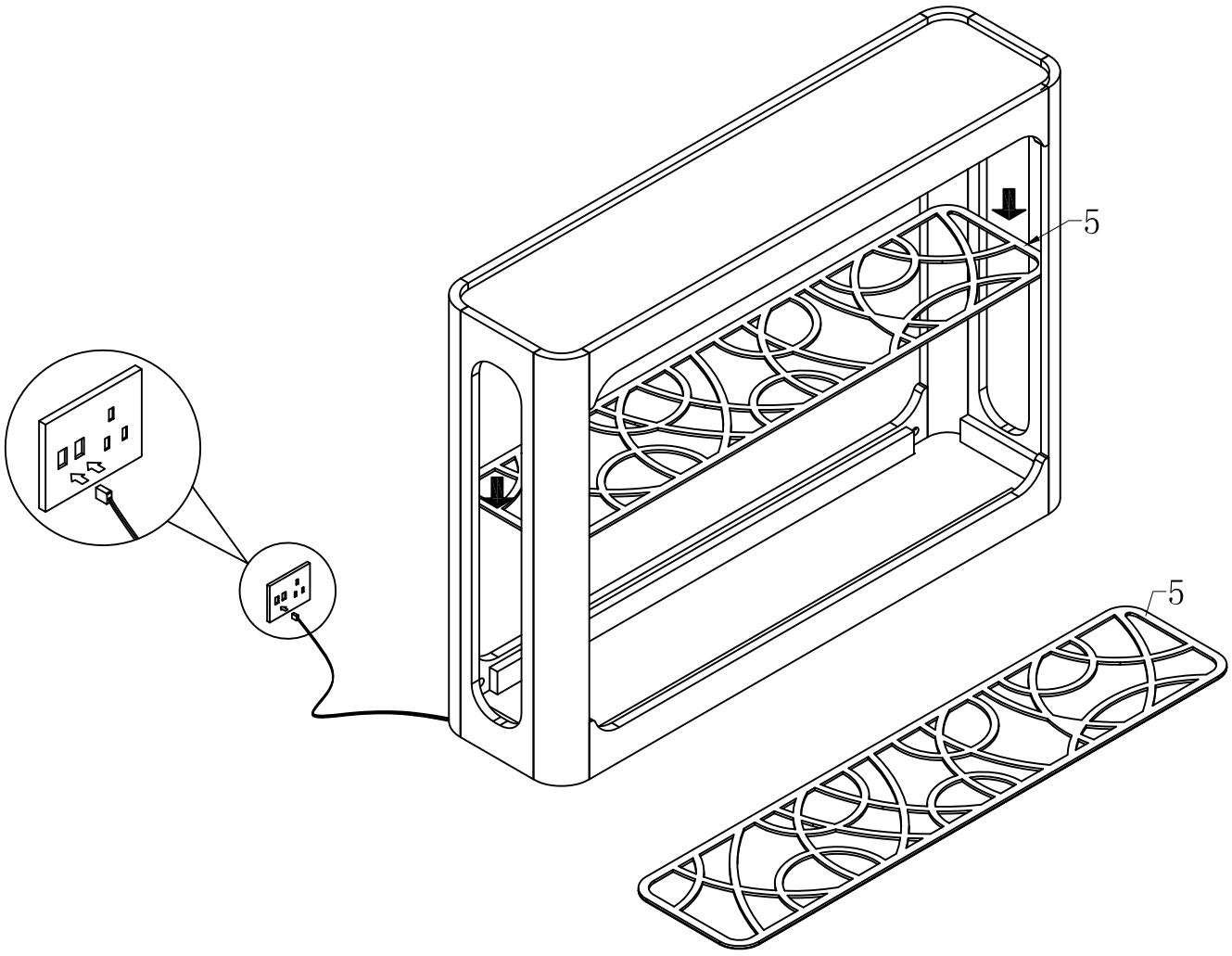

ASSEMBLY INSTRUCTIONS

10

HARDWARE E X 1PC
HARDWARE F X 1PC
HARDWARE I X 2PCS
HARDWARE G X 1PC
HARDWARE H X 1PC

SAFETY STRAP TO PREVENT TIP-OVER

SAFETY STRAP TO PREVENT TIP-OVER
Drywall: Select a location where you want the table to be mounted. Place the assembled table against the wall and, on the wall, mark the location where the anchor will be placed. Drill a hole slightly smaller then the size of the screw . Push the anchor as far as it will go with your finger. Tap gently with a hammer until the anchor is flush with the wall surface. Secure the strap using a Phillips screwdriver to tighten the screw through the strap and into the anchor. On the other end of the strap, secure it using a Phillips screwdriver to tighten the screw through the strap and into the back of the table.

If the location happens to be a wood stud, do the following:

No anchor will be needed if securing to a wood stud. Drill a hole slightly smaller then the size of the screw . Secure the strap using a Phillips screwdriver to tighten the screw through the strap and into in the wall (wood stud). On the other end of the strap, secure it using a Phillips screwdriver to tighten the screw through the strap and into the back of the table.

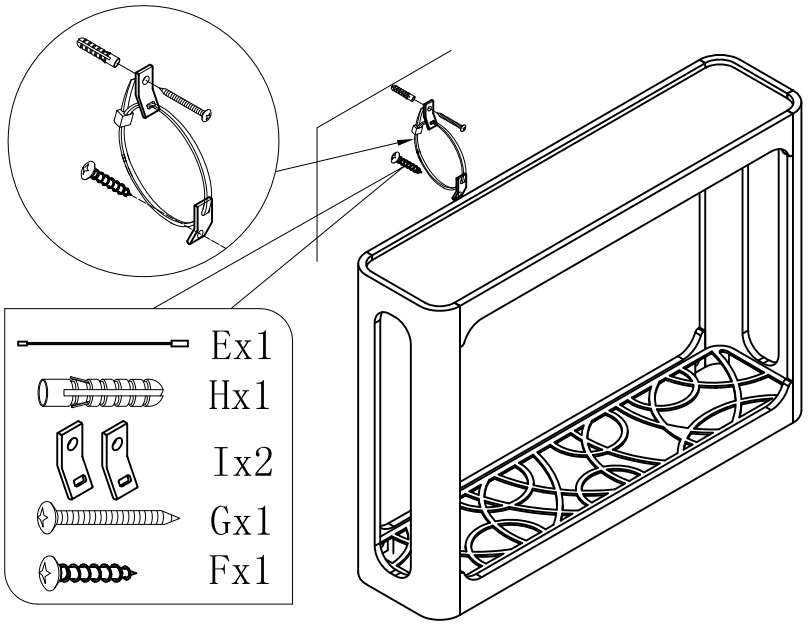

Before strapping, make sure the table is rested on a flat surface and does not feel loose or wobbly. If it does, double check that the bolts/screws are secured and properly tightened.

ASSEMBLY IS COMPLETED